FPT UNIVERSITY

LAB REPORT

ELECTRONIC CIRCUITS

Lab 3:

Non-Inverting Amplifier

Team: <Group 5>

Class: IC2004 - ELC201

Team members: **Vu Quoc Anh**

Truong Dong Hung

Lam Duy Loc

Le Nguyen Huy Hoang

Lecturer: Dr. Le The Dung

HO CHI MINH CITY, JULY 2025

I. INTRODUCTION

The non-inverting amplifier is a foundational configuration in analog electronic circuit design, frequently employed due to its ability to provide stable voltage gain without phase inversion. In this configuration, the input signal is applied directly to the non-inverting (+) terminal of an operational amplifier (Op-Amp), which acts as a high-gain differential amplifier. The circuit's behavior is stabilized using a negative feedback network, ensuring a predictable and controllable operating point (Sedra and Smith, 2014). When the Op-Amp operates within its linear region, the principle of virtual ground ensures the voltage at the inverting (-) terminal closely follows the input voltage. This action, governed by the feedback network, results in an amplified output voltage that is in-phase with the input signal. Non-inverting amplifiers are widely applied in signal buffering, pre-amplification stages, and active filter designs (Horowitz and Hill, 2015). The objective of this experiment is to model, simulate, and evaluate the performance of a non-inverting amplifier to develop practical insight into its operational characteristics.

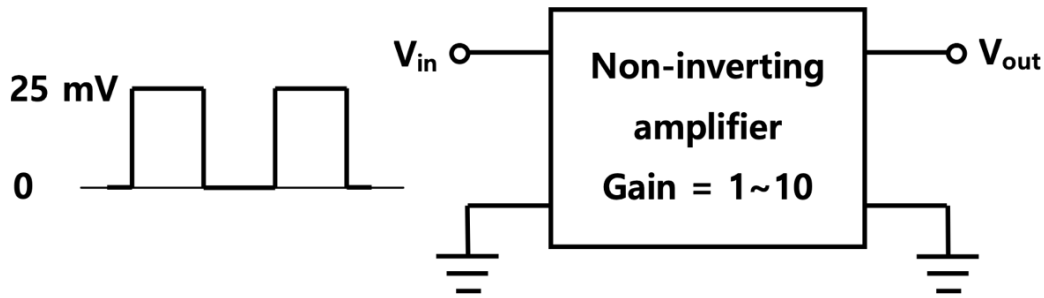

Figure 1. The circuit diagram of < *non-inverting amplifier*>.

II. SIMULATION METHOD

1. Schematic diagram

Circuit Configuration

The non-inverting amplifier depicted in Figure 1 is configured around an operational amplifier (Op-Amp), U1, a standard approach for achieving stable and predictable voltage gain. This configuration applies the input signal (V1) directly to the non-inverting (+) terminal of the Op-Amp. The circuit's gain and stability are established by a negative feedback network, which connects the output terminal back to the inverting (-) terminal. This network consists of a feedback resistor, Rf, and a resistor, R, connected to ground. The Op-Amp is powered by a symmetrical ±5V DC supply (V2 and V3) to establish the necessary DC operating conditions and allow for the amplification of bipolar signals without clipping. The amplified output voltage (Vout) is taken directly from the output terminal of the Op-Amp.

Operation & Hand-calculation

The operation of the circuit is analyzed based on the characteristics of an ideal Op-Amp, primarily: infinite input impedance and infinite open-loop gain.

1. Due to the infinite input impedance, no current flows into the inverting (-) or non-inverting (+) terminals.
2. With negative feedback applied, the infinite open-loop gain forces the voltage at the inverting terminal (v−) to be equal to the voltage at the non-inverting terminal (v+). This is known as the virtual short concept.

Since the input voltage V_{in} is applied to the non-inverting terminal, we have:

v+ $=V_{in}$

Therefore, due to the virtual short:

V_1= v− =v+ = V_{in}

Because no current enters the inverting terminal, resistors R and Rf form a simple voltage divider across the output voltage V_out. The voltage at the inverting terminal (v_−) can be expressed as:

$$V_1 = v- = V_{out} \cdot \frac{R}{R_f + R}$$

By equating the two expressions for v_−, we get:

$$V_{in} = V_{out} \cdot \frac{R}{R_f + R}$$

Rearranging this equation to find the closed-loop voltage gain ($A_v = \frac{V_{out}}{V_{in}}$) yields the fundamental formula for the non-inverting amplifier:

$$A_v = 1/\left(\frac{R}{R_f + R}\right) = 1 + \frac{R_f}{R}$$

This equation shows that the gain is determined solely by the ratio of the external resistors, making it stable and easily configurable.

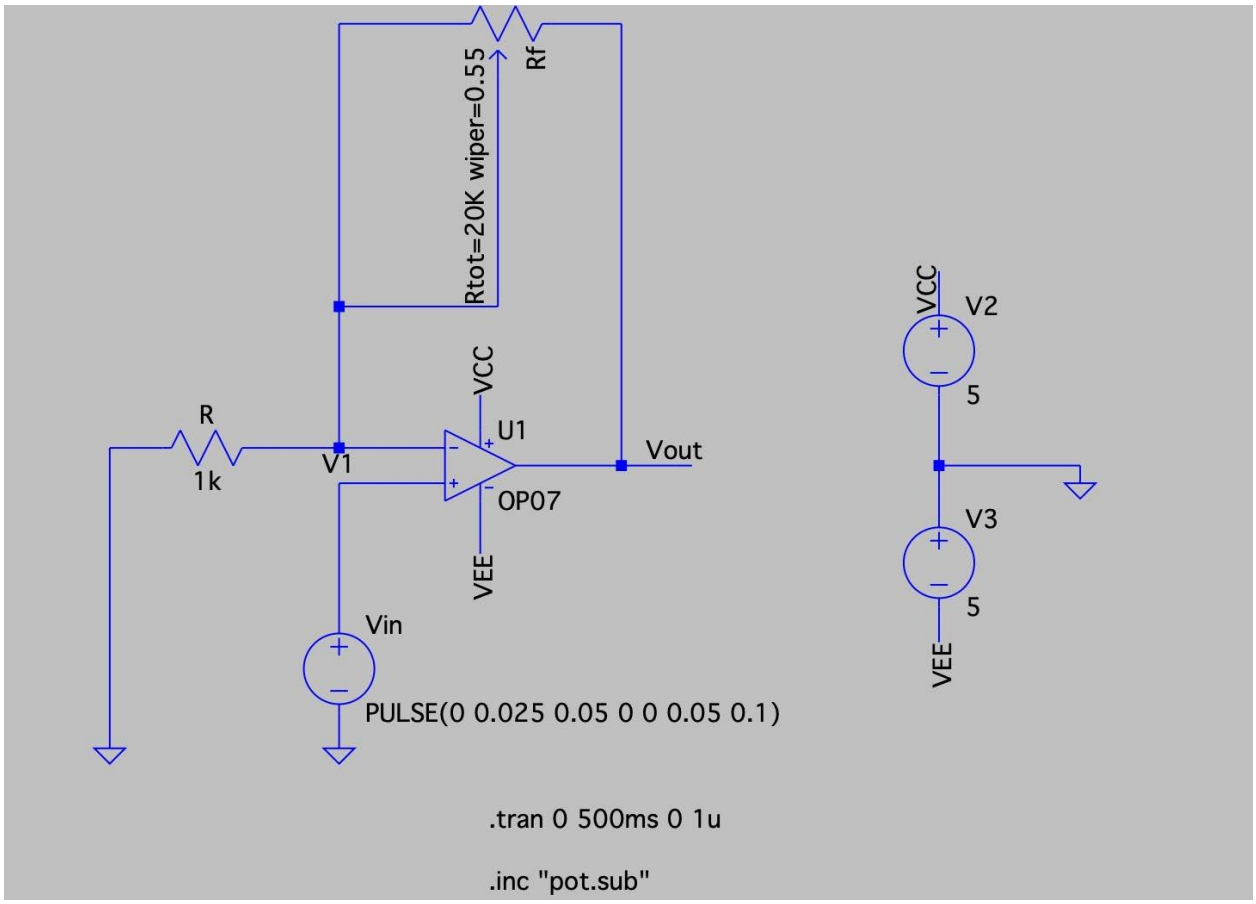

Figure 2. The schematic of <non-inverting amplifier> designed using <*LTSpice*>.

2. Simulation settings

LTspice XVII was utilized as the simulation platform. LTspice XVII is a high-performance SPICE simulator, schematic capture, and waveform viewer with enhancements and models for easing the design of analog circuits. It is a widely used tool in academia and industry for analog circuit simulation due to its accuracy and user-friendly interface.

2.1 Simulation Platform Configuration

In this experiment, the following setup was applied:

- **Simulation software:** LTspice XVII.
- **Analysis type:** Transient analysis.
- **Time range:** 0 to 500 milliseconds.
- **Maximum Time step:** 1 microsecond (µs).
- **Command line used:** `.tran 0 500ms 0 1u`.

2.2 Step-by-Step Simulation Procedure

The following steps were taken to construct and simulate the non-inverting amplifier circuit:

1. **Launch LTspice** and create a new schematic workspace.
2. **Add the components:**
   - **Operational Amplifier (U1):** Place an Op-Amp component and select the model `OP07` from the component library.
   - **Resistor (R):** Place a resistor and set its value to `1k`.
   - **Potentiometer (Rf):** Implement a potentiometer by adding a resistor and defining it using a subcircuit. Add the SPICE directive `.inc "pot.sub"` to the schematic and set the resistor's value to `{Rpot}`. Add another directive `.param Rpot={Rtot*(1-wiper)}` where `Rtot=20K`. The gain is adjusted by changing the `wiper` value (e.g., `wiper=0.55` for a 9kΩ resistance).
   - **DC Voltage Sources (V2, V3):** Place two DC voltage sources for the power supply and set their values: V2 = `5V`, V3 = `5V` (connected to provide a negative rail).
   - **Input Voltage Source (V_{in}):** Place a voltage source for the input signal. Right-click on the V1 component, select "Advanced", and choose the "PULSE" function. Set the function as `PULSE(0 0.025 0.05 0 0 0.05 0.1)`.
   - **Ground (GND):** Add ground symbols and connect them to the appropriate points in the circuit.
3. **Wire Components:** Connect the components according to the non-inverting amplifier topology shown in Figure 1.
   - Connect the $\mathbf{V_{in}}$ source to the non-inverting input (+) of U1.
   - Connect the feedback resistor Rf between the output of U1 and its inverting input (-).
   - Connect resistor R between the inverting input (-) and ground.
   - Connect the power supplies V2 and V3 to the VCC and VEE pins of U1, respectively.
   - Label the output node `Vout`.
4. **Simulation Command:**
   - From the "Simulate" menu, select "Edit Simulation Cmd".
   - Choose the "Transient" tab.
   - Set "Stop time" to `500m` (500 milliseconds).
   - Set "Time to start saving data" to `0`.
   - Set "Maximum Timestep" to `1u` (1 microsecond).
5. **Run the Simulation:**
   - Press the "Run" button to begin the simulation.
   - Use the probe tool to click on the input node (connected to $\mathbf{V_{in}}$) and the output node (`Vout`) to visualize their voltage waveforms in the plot window.

III. IMPLEMENTATION METHOD

1. PCB layout

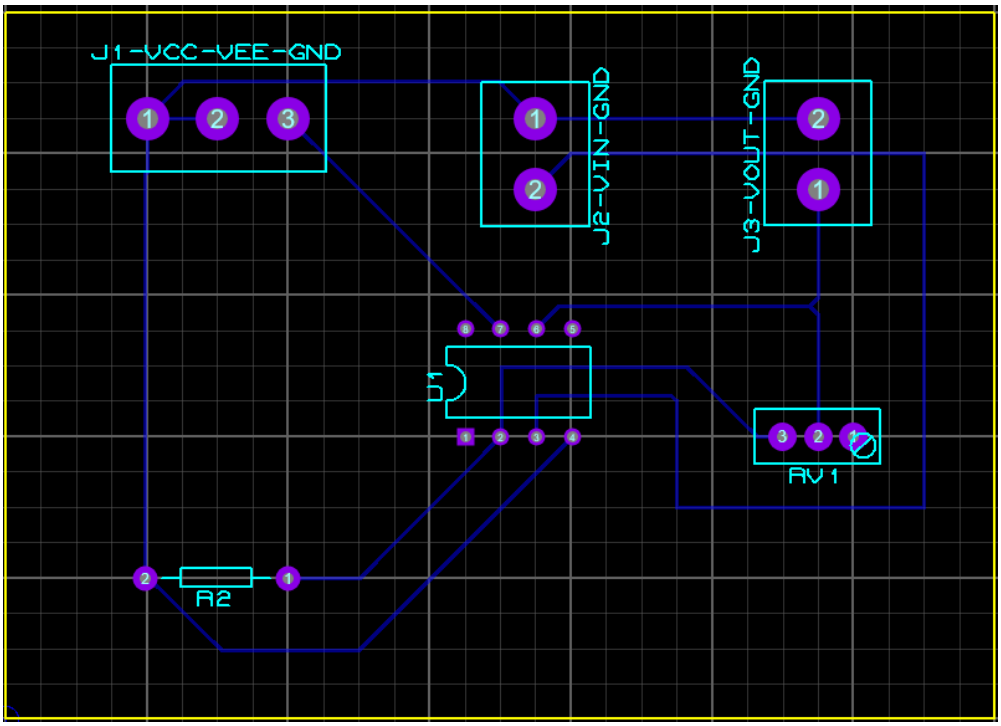

Figure 3. PCB design in Proteus

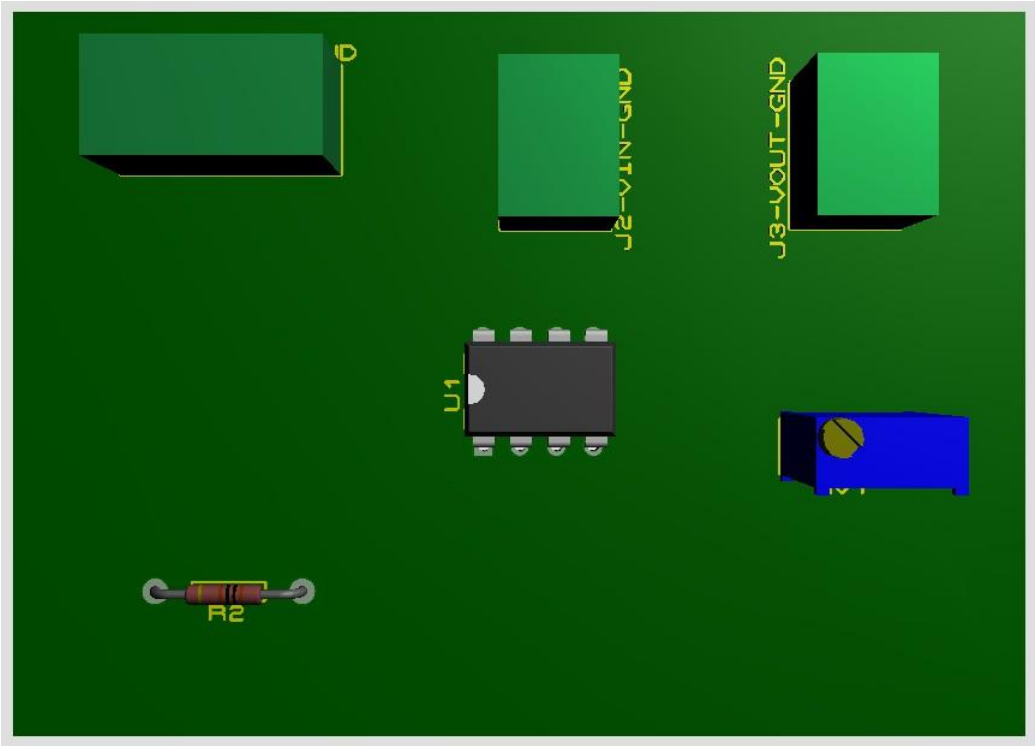

Figure 4. 3D view

2. Final product

(*Provide the snapshot of the implemented circuit, then describe in detail its structure*)

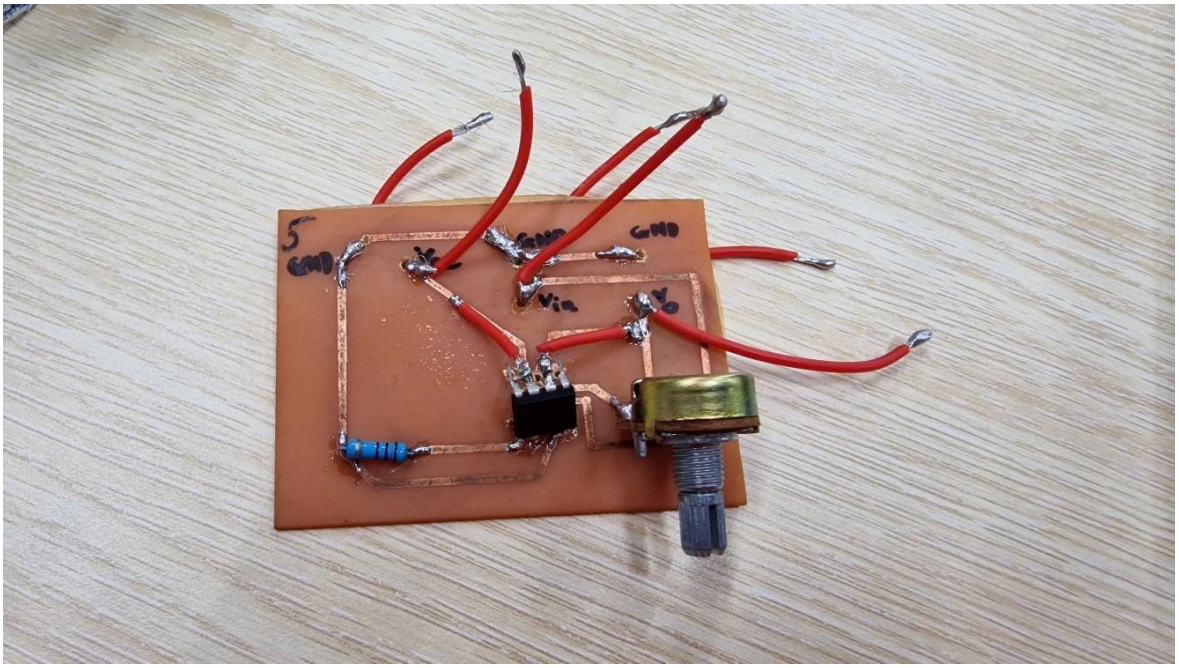

Figure 5. PCB board made

During the PCB making process, the circuit was manually drawn onto the copper-clad board instead of using the toner transfer (iron-on) method. This decision was made to ensure the reliability and integrity of fine traces.

However, a layout transfer error occurred. The non-mirrored bottom-layer design was used as the guide for drawing, but the components were subsequently placed on this same etched side. As a result, the traces designed to run underneath the integrated circuit (IC) were obstructed by the component's pins, making standard through-hole soldering impossible.

To overcome this issue, an unconventional soldering technique was implemented: several of the IC's pins were lifted, and point-to-point connections were wired directly to their corresponding traces to complete the circuit. (*)

We use potentiometer WH138-B20K to adjust the resistance values of R_f, hence controlling the desired gain.

IV. SIMULATION RESULTS

(*Provide simulation results to verify the operation of the circuit. Comment on these results*)

Gain = 1:

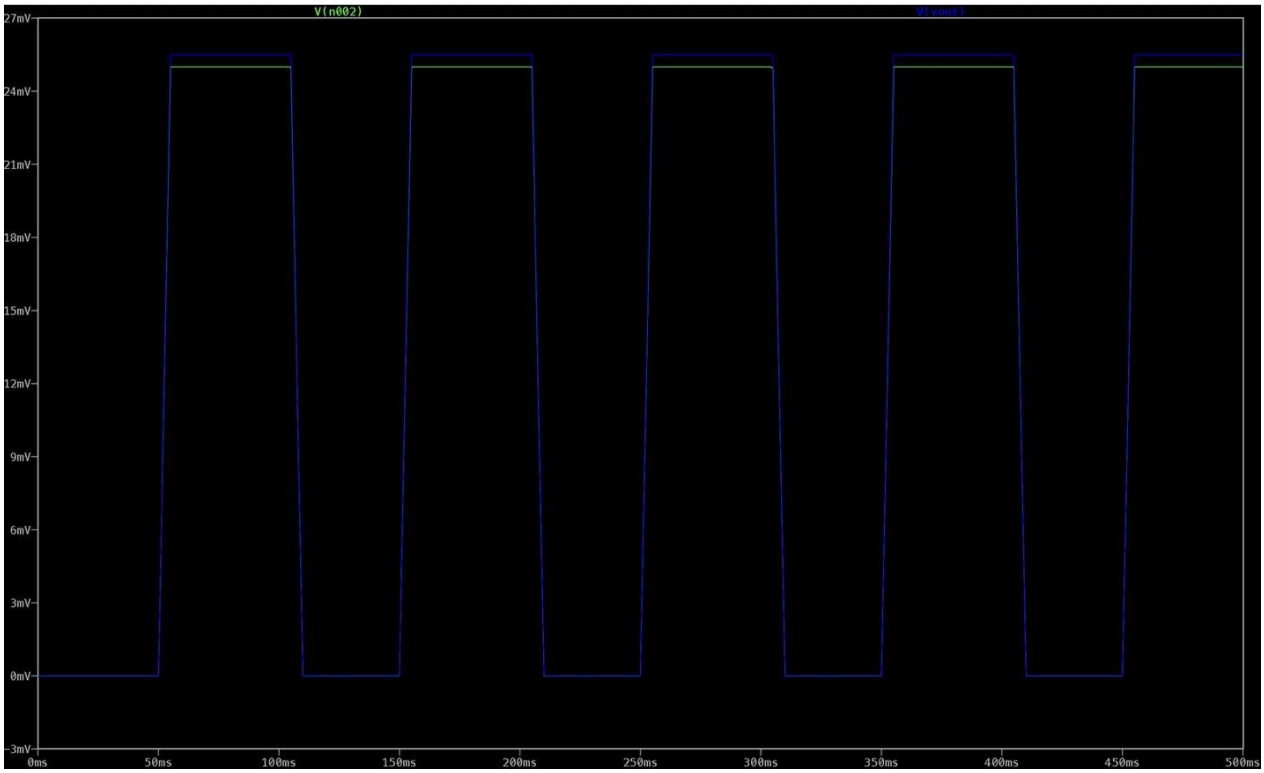

Figure 6. Simulation result on Oscillator Scope in LTSpice, $R_f = 0$, $A_v = 1$.

Gain = 10:

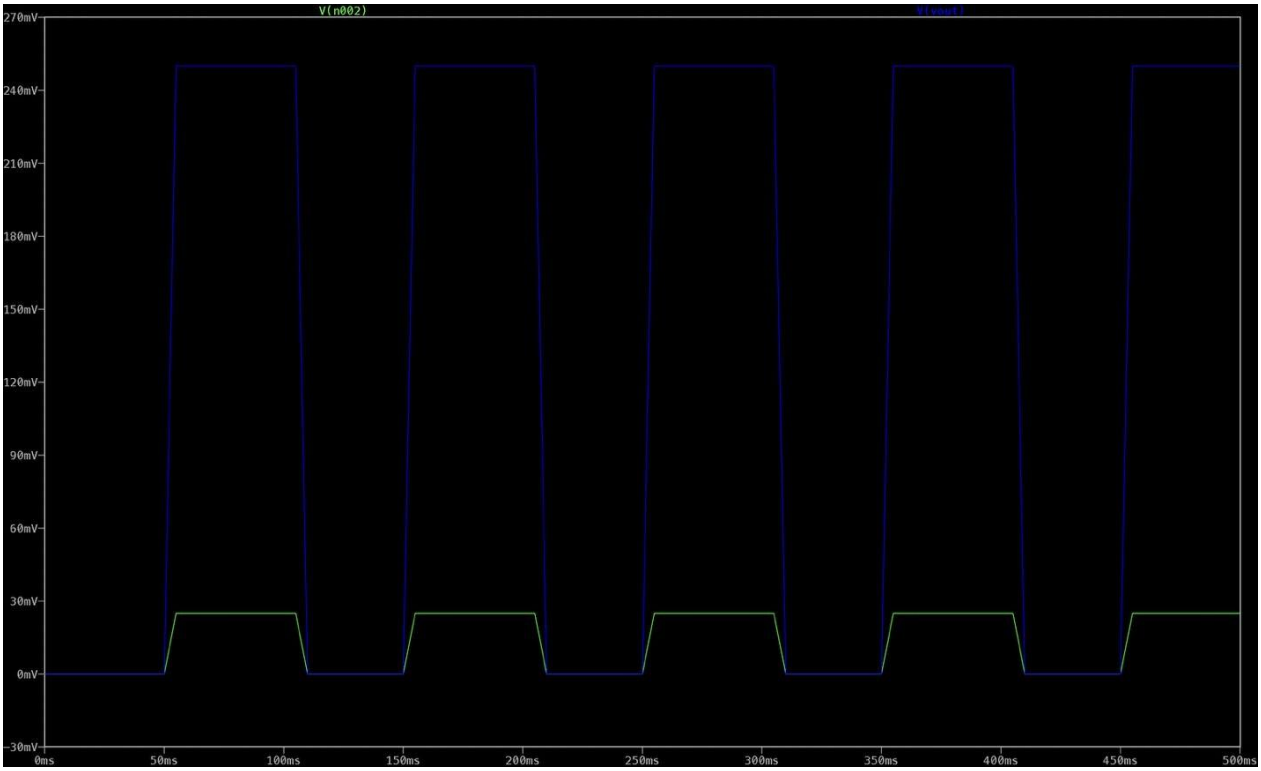

Figure 7. Simulation result on Oscillator Scope in LTSpice, $R_f = 9k$, $A_v = 10$.

Gain = 20:

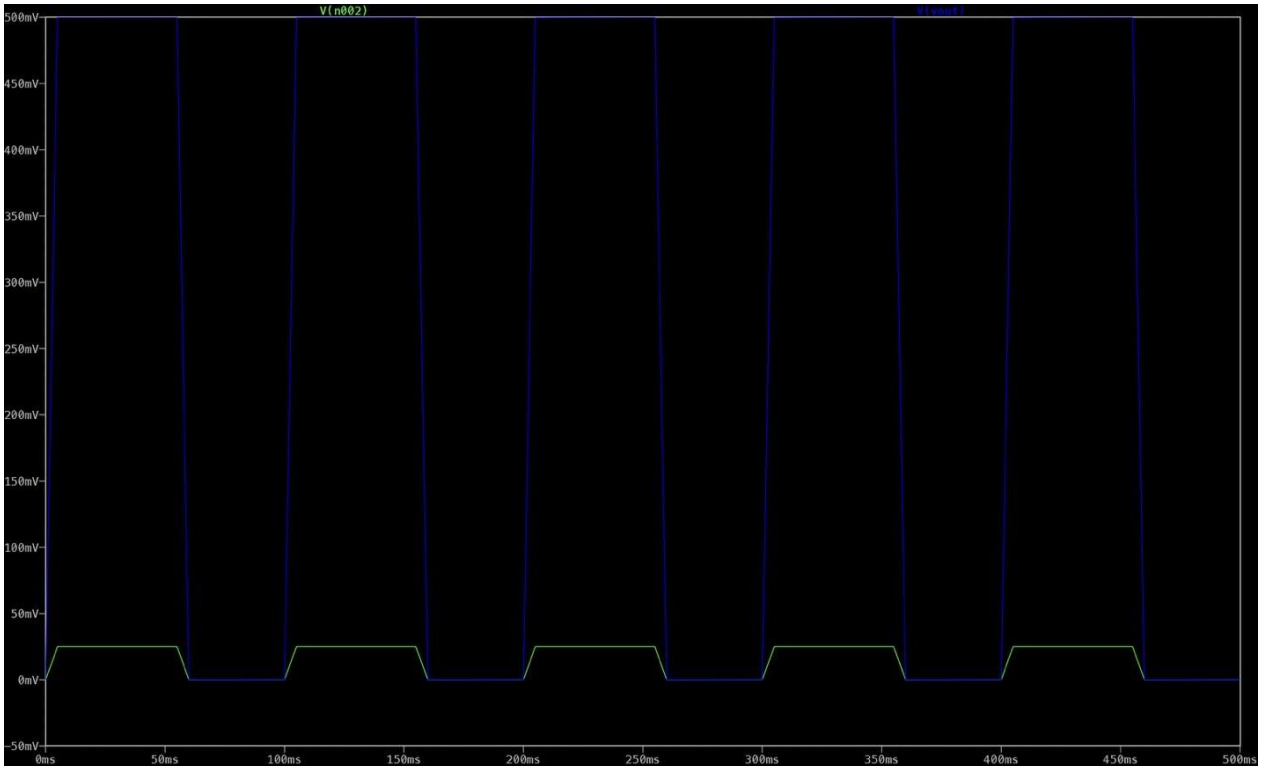

Figure 8. Simulation result on Oscillator Scope in LTSpice, $R_f = 19k$, $A_v = 20$.

The simulation results confirm hand-calculation correct.

V. EXPERIMENTAL RESULTS

(*Provide experimental results to verify the operation of the circuit. Comment on these results and compare them with simulation results*)

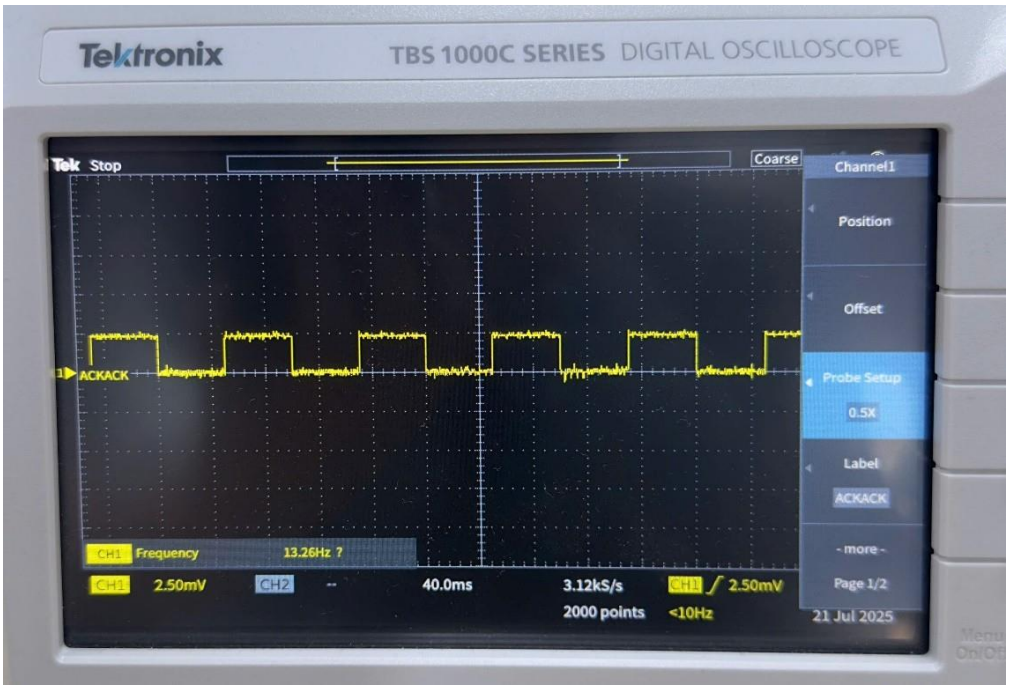

Figure 9. Input pulse 2.5 mV observed on the oscilloscope.

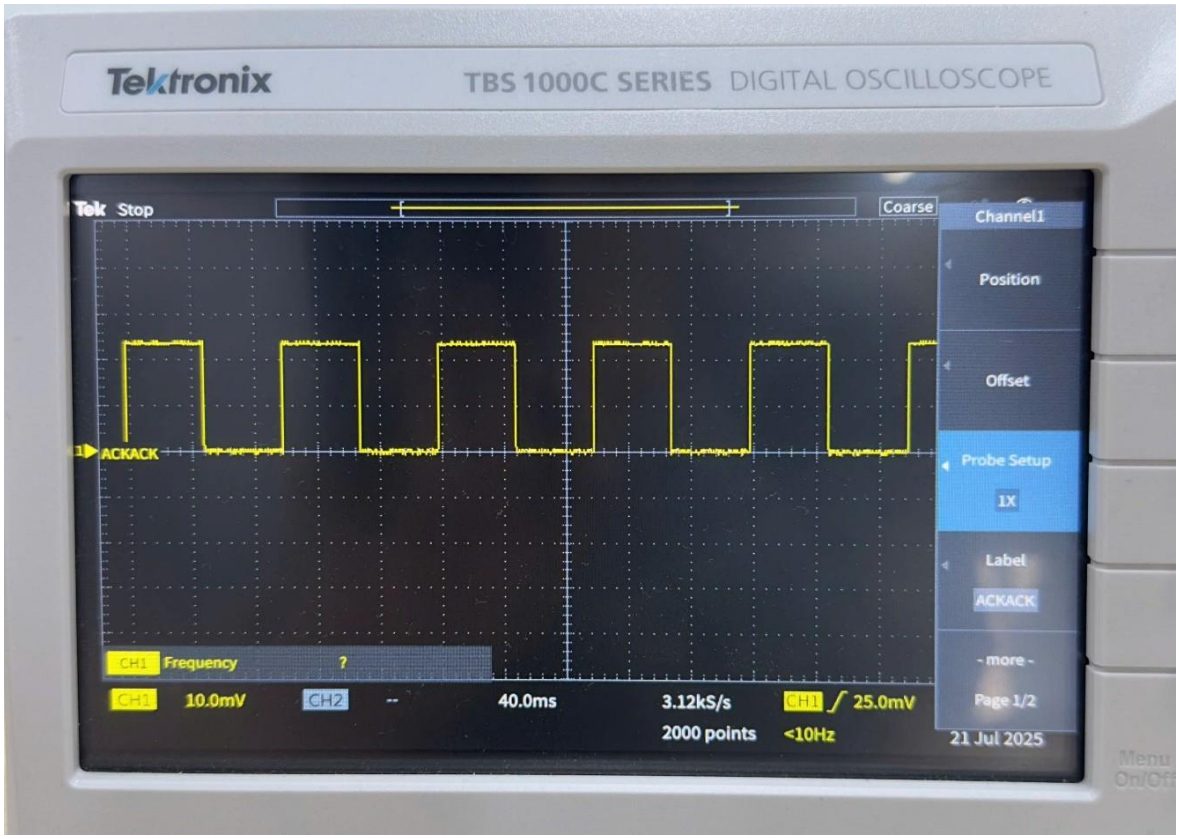

Figure 10. $V_{out} = 25\ mV;\ A_v = 10.$

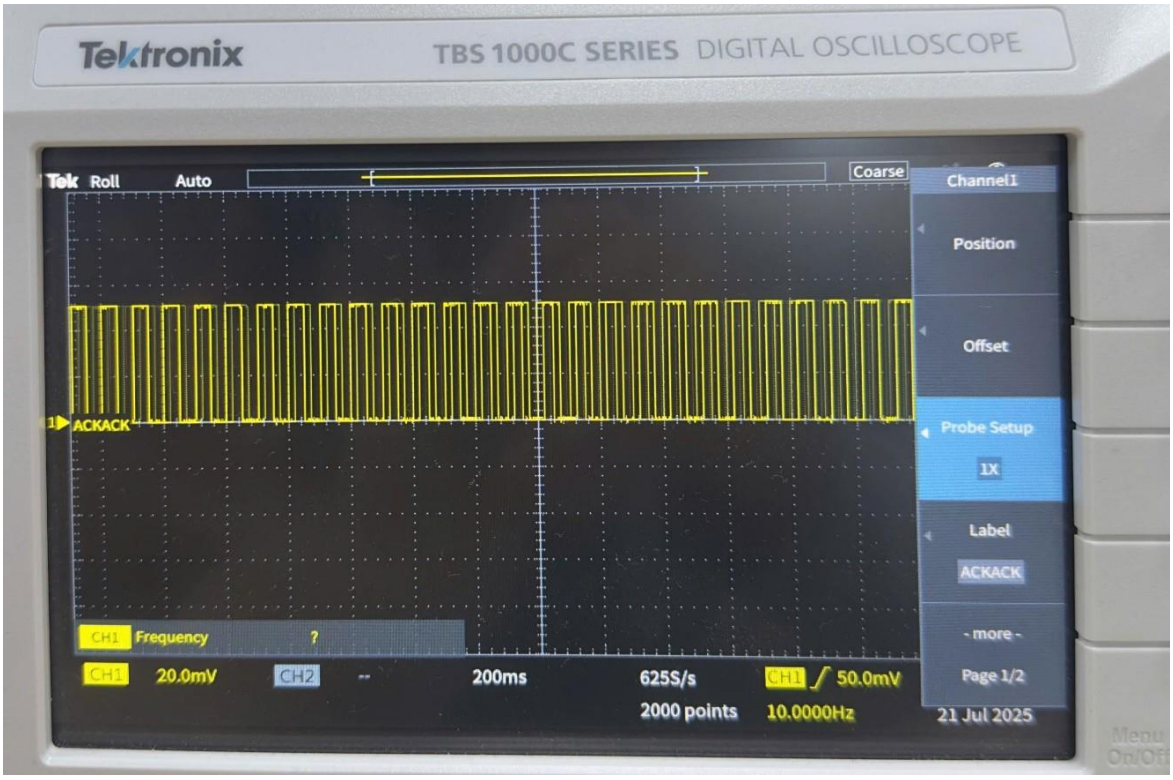

Figure 11. $V_{out} = 50\ mV;\ A_v = 20.$

The simulation results confirm the theoretical operation of the non-inverting amplifier. In all cases, the output waveform is in-phase with the input waveform. The amplitude of the output signal scales correctly with the gain setting, which is determined by the ratio of Rf to R. For a gain of 10, the 2.5mV input is amplified to approximately 25mV. For a gain of 20, the output reaches 50mV. The timing of the pulses (50ms delay, 50ms pulse width) is preserved at the output, confirming the circuit's function as a linear amplifier for this signal.

We are satisfied with the results that our PCB circuit produces, it confirms the relationship between R_f and A_v as we shift R_f up, the output waveform rises immediately and vice versa. However, it is noted that due to the actual implementation in (*) of the components on board, especially the potentiometer, its soldering can become weak & fall out after switching so many times.

VI. CONCLUSION

1. Summary of Output and Behavior

This laboratory experiment successfully modeled and simulated the performance characteristics of a non-inverting operational amplifier. Through LTspice simulations, the circuit consistently demonstrated its characteristic voltage amplification without any phase inversion between the input and output signals. The results confirmed that the voltage gain is accurately and predictably controlled by the external feedback network, aligning perfectly with the theoretical formula $A_v = 1 + {}^{R_f}_{R}$. The simulation results provide a strong baseline for understanding the

circuit's ideal behavior. Any minor discrepancies that might arise in a physical implementation could be attributed to practical factors such as component tolerances, parasitic effects on the Printed Circuit Board (PCB), and the inherent limitations of the Op-Amp model and measurement equipment.

2. Future Directions of the Circuit

Future work on this non-inverting amplifier could involve a detailed investigation into its frequency response to determine the gain-bandwidth product (GBWP), an analysis of the amplifier's performance under various load conditions, and exploring its slew rate limitations with higher frequency signals. Further enhancements might include implementing offset nulling techniques to improve DC accuracy or designing multi-stage amplifiers to achieve higher overall voltage gain.

Furthermore, this non-inverting amplifier circuit block can be effectively combined with other circuit configurations to form more complex and functional systems for various real-world applications:

- **Active Filters:** When combined with reactive components (capacitors), the non-inverting amplifier is a core building block for active filters (e.g., Sallen-Key, Multiple Feedback topologies) used in audio equalizers, communication systems, and sensor interfaces to shape the frequency content of a signal.
- **Audio Preamplifiers:** Due to its high input impedance and stable, low-distortion gain, the non-inverting configuration is ideal for pre-amplifying low-level signals from

microphones, instrument pickups, or other audio sources before they are sent to a power amplifier stage.

- **Voltage Buffers (Voltage Followers):** A special unity-gain case of this circuit is used as a voltage buffer for impedance matching between a high-impedance source and a low-impedance load, preventing signal loss and distortion.
- **Sensor Interfacing and Data Acquisition:** The amplifier is well-suited for interfacing with a wide range of sensors. It can amplify weak sensor signals to a level compatible with microcontrollers or analog-to-digital converters (ADCs) in data acquisition systems used for industrial control, environmental monitoring, and medical instrumentation.
- **Summing and Difference Amplifiers:** The principles of the non-inverting amplifier are fundamental to designing more complex operational circuits, such as summing and instrumentation amplifiers, which are crucial for signal processing and measurement applications.

TEAM MEMBERS' CONTRIBUTION

Class: <IC2004>		**Team: <Team 5>**		**Contribution**
#	**Student ID**	**Student Name**	**Task**	**%**
1	SE203519	Vũ Quốc Anh	Simulation, PCB, Report	25
2	SE201121	Trương Đông Hưng	Simulation, Research, Report	25
3	SE190907	Lâm Duy Lộc	Simulation, PCB	25
4	SE201132	Lê Nguyễn Huy Hoàng	Simulation, Report	25
Total:				**100%**

REFERENCES

[1] Horowitz, P., & Hill, W. (2015). *The Art of Electronics*. 3rd ed. Cambridge: Cambridge University Press.

[2] Sedra, A. S., & Smith, K. C. (2014). *Microelectronic Circuits*. 7th ed. New York: Oxford University Press.

[3] Boylestad, R. L., & Nashelsky, L. (2013). *Electronic Devices and Circuit Theory*. 11th ed. Upper Saddle River, NJ: Pearson Education.